1. SILO VENTING FILTERS (N-SERIES)
1.4. TYPE N1500

DESCRIPTION

- **silo venting filter N1500 is a cylindrically shaped dust collector for dedusting of pneumatically filled silos**

OPERATION QUALITIES

- air volume 1500 m^3/h
- filtration area 24 m^2
- residual dust concentration at the output <10 mg/m^3
- temperature resistance -20 °C / +80 °C
- compressed air needed 6 bar, consumption 6 Nm^3/h
- pressure loss 1500 Pa
- weight: 132 kg

DESIGN

- carbon steel construction
- dust collector body diameter 600 mm
- **filtered air blows away through the hole between casing and top cover**
- filter element: 1x filter cartridge
  made of polyester in basic design
  diameter 325 mm, lenght 1500 mm
- air tank with JET-PULS filter cartridges recovery and timer
- compressed air inlet: internal thread G ½“
- electromagnetic valve (1 pc), safety valve (1 pc), pressure regulator (1 pc)

ADDITIONAL ACCESSORIES

- ATEX version
- non-standard temperature design -40 °C / +150 °C

BENEFITS

- robust design
- easy filter element replacement
- low dust emission level
- excellent access to every filter component

Silo venting filter N1500 is a cylindrically shaped dust collector. It is mainly used for dedusting of pneumatically filled silos.

1. SILO VENTING FILTERS (N-SERIES)
1.4. TYPE N1500
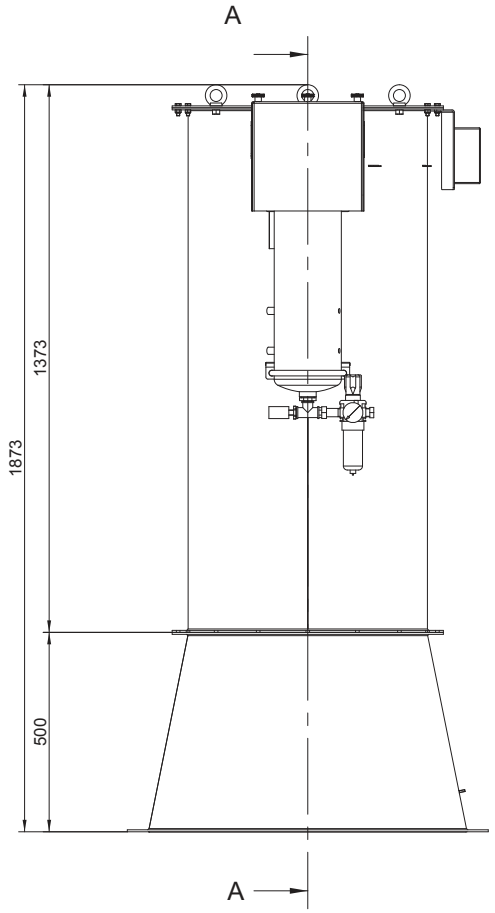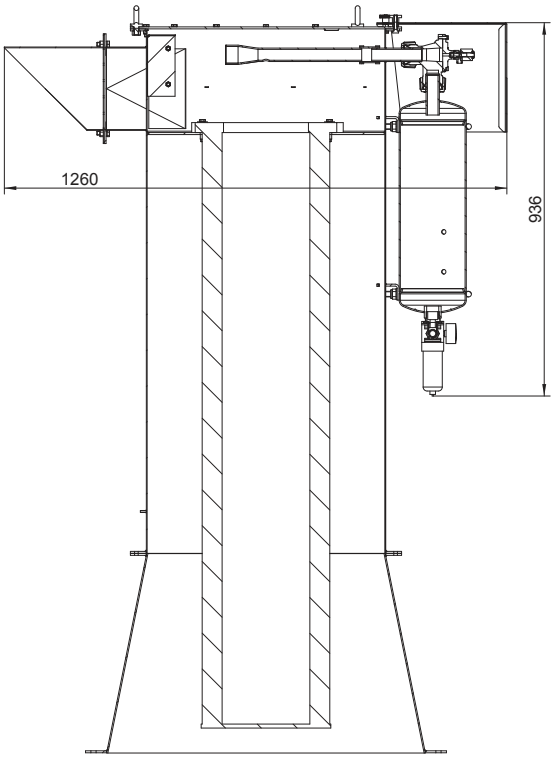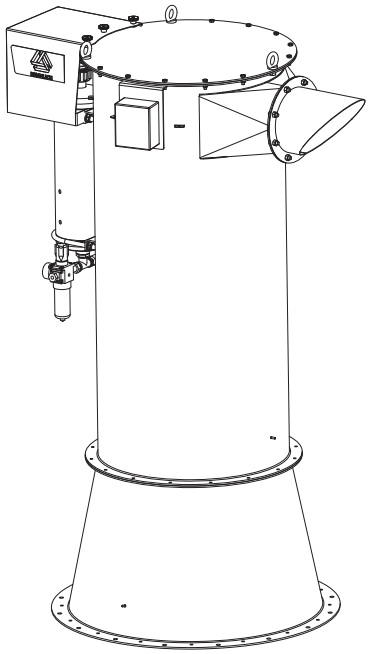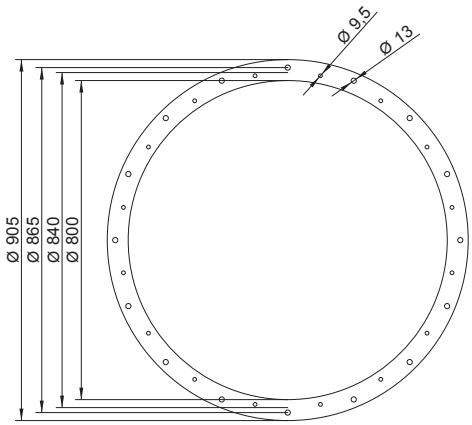
HENNLICH DIVISION ENGINEERING